Unisanta Science and Technology, 2025, 6, November
Published Online 2025 Vol.14 Nº1 http://periodicos.unisanta.br/index.php/sat)

UNISANTA
Science and Technology
ISSN 2317-1316

PAL2v Indoor Air Quality Estimator

Bruno da Silva Alves[1], Fernando da Silva Paulo Junior[1], Eduardo dos S. Araújo Filho[1], Diego Oliveira da Cruz[1], Arnaldo de Carvalho Junior[1], João Inácio da Silva Filho[2]

[1]**IFSP**- Embedded Artificial Intelligence Laboratory (EAILAB), Federal Institute of Education, Science and Technlogy of São Paulo, Rua Maria Cristiana, 50, Jardim Casqueiro – Cubatao – Sao Paulo.

[2]**UNISANTA** – Applied Paraconsistent Logic Group, Santa Cecilia University, Rua Oswaldo Cruz, 277 - Boqueirão - Santos/SP

E-mail*:* alves.bruno1@aluno.ifsp.edu.br
Received Oct, 2025

Abstract: This study investigated the application of paraconsistent annotated logic with annotation of 2 values (PAL2v), embedded in an ESP32 microcontroller and using data from MQ series sensor to monitor air quality in indoor environments. PAL2v was also used to reduce the noise of the signals provided by the sensors (PAL2v Filter), reducing the ripple and facilitating the classification of emission levels according to established environmental standards. The system worked reliably during the tests and was able to detect low air quality faster. Graphic and intuitive display of results can help people respond early to harmful pollutants, which supports better comfort, health, and safety, and can be useful for intelligent residential and urban automation systems.

Keywords: Air Quality; MQ Sensors; Paraconsistent logic; PAL2v; Internet of Things (IoT).

1. INTRODUCTION

The accelerated growth of urban centers and technological advancements are driving up demand for more effective construction automation. Increasing efficiency, sustainability, and urban quality depends on smart environments and spaces that use integrated sensors for real-time monitoring of crucial variables [1]. Among them, air quality stands out as critical due to its impact on human health, especially in closed urban environments [1].

Recent studies have addressed this theme using low-cost sensors, such as the MQ series, to measure dangerous carbon (CO), carbon dioxide (CO_2), ammonia (NH_3), and volatile organic compounds (VCOs) [2]. When combined with Wi-Fi-enabled microcontrollers, these sensors allow accessible, reliable, and continuous environmental monitoring solutions [3].

The implementation of the sensor in automation and control has been widely researched, especially with the growth of intelligent environments, such as the Internet of Things (IoT) and energy-saving technologies. These interconnected sensors collect and process data instantly, facilitating adaptive automation and improving the quality of life of occupants. The authors point out that accessible and easily integrated sensors can make these technologies viable in commercial and residential environments [4].

Air quality in urban areas is a growing global concern for public health agents, especially in cities. Limited natural ventilation and unnoticed exposure to gaseous pollutants are associated with higher risks of respiratory, neurological, and cardiovascular problems [5]. This affects productivity, well-being, and general health, highlighting the importance of accessible and continuous monitoring of air quality in homes [5].

From a technological point of view, MQ family sensors are electrochemical devices that detect specific gases. The MQ135 and MQ7 models were investigated for their sensitivity to gases such as CO, NH_3, and CoV [3] [4]. The architecture of the monitoring system with these sensors typically involves continuous data collection, which is then sent to the cloud (a remote server) or a local platform.

Devices such as exhaust fans, alarms, or notifications are automatically activated when specific levels are detected. It is noteworthy that the application of IoT devices for environmental control in buildings not only

Copyright © 2025 ISESC.

improves energy efficiency but also enhances safety and environmental comfort [6].

A robust, reliable, and straightforward algorithm should be chosen to be incorporated into the microcontroller, ensuring the development of a compact system for internal environments.

In this sense, the two values (PAL2V) noted paraconsistent logic can be a powerful tool for calculating an air quality estimator. PAL2V stands out as it can deal with contradictory and uncertain information, offering mathematical robustness and computational simplicity, essential characteristics for real-time embedded applications [7].

The purpose of this research is to develop a system to monitor and estimate air quality in urban environments, using PAL2V algorithms and measuring smoke gases through sensors, offering an innovative, scalable, affordable, and efficient solution that can contribute to improving the safety and health of urban spaces, aligned with the principles of intelligent cities and sustainable houses [8].

2. PAL2v REVIEW

Paraconsistent logic (PL) is a type of logical reasoning that is interesting to deal with contradictory signals because, contrary to classical logic, it does not consider a contradiction as a foundation for invalidating the entire inference system. PL enables the quantification of the degree of contradiction and certainty of information, allowing conflicting data to be processed in a controlled manner and without loss of consistency [7]. A variation of PL is the paraconsistent annotated logic with annotation of 2 values(PAL2V). By carrying with an orderly pair of two inputs (μ_1,μ_2). The first value, denoted as "μ", represents the degree of favorable evidence. The complement of the second value "λ" is called the unfavorable evidence degree.

PAL2V offers better accuracy to express knowledge about a proposition p [9]. PAL2V equations and rules can be organized and placed in the form of an algorithm for computational purposes, receiving the name of Paraconsistent Analysis Node (PAN) [7],[10]. Figure 1 presents the symbol of a PAN, while Figure 2 presents its standard algorithm, which is well described in [9]. The main output is the resulting real evidence degree (μ_{ER}), after the extraction of contradictions, with values between [0,1]. The other possible outputs are the evidence degree (μ_E), contradiction degree (μ_{ECT}), and the certain interval (φ).

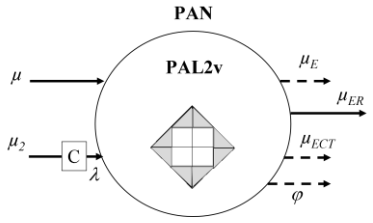

Fig. 1. PAN symbol.

Input values
μ */ favorable evidence degree: 0 ≤ μ ≤1
λ */ unfavorable evidence degree: 0 ≤ λ ≤1
Calculate the Contradiction Degree

$$\mu_{ECT} = \frac{D_{CT}+1}{2} = \frac{\mu+\lambda}{2}$$

Calculate the Certain Interval

$$\varphi_E = 1 - |2\mu_{ECT} - 1|$$

Calculate the Certainty Degree

$$D_C = \mu - \lambda$$

Calculate the Contradiction Degree

$$D_{CT} = \mu + \lambda - 1$$

Calculate the Distance

$$D = \sqrt{(1-|D_C|)^2 + D_{CT}^2}$$

Calcule o Grau de Certeza Real
If $Dc > 0$, $D_{CR} = (1 - D)$
If $Dc < 0$, $D_{CR} = (D - 1)$
Output signal
If $\varphi_E \leq 0{,}25$ or $D > 1$
Let S1 = 0,5 and S2= $\varphi_{E(\pm)}$; Indefinition and go to End.
Calculate the Real Certainty Degree

$$\mu ER = \frac{DCR+1}{2}$$

Determine the signal of Certain Interval
If $\mu_{ECT} < 0{,}5$; $\varphi = \varphi_{E(-)}$
If $\mu_{ECT} > 0{,}5$; $\varphi = \varphi_{E(+)}$
If $\mu_{ECT} = 0$; $\varphi = \varphi_{E(0)}$
Output results
Let S1 = μ_{ER} e S2 = $\varphi_{E(\pm)}$
End

Fig. 2. PAN algorithm.

A PAN can be reorganized, as presented in Figure 3, to work as an average filter. In this case, it is called a paraconsistent artificial neural cell of learning by contradiction extraction ($PANCL_{CTX}$) [11]. Equation 1 presents the output of this cell. The learning factor (F_L), between [0,1], adjusts the cell's performance, where "*n*" is the number of the current sample. The lower the value, the greater the filter's performance. Adding $PANCL_{CTX}$ in sequence allows the creation of second, third, or higher-order filters [11],[12].

Copyright © 2025 ISESC

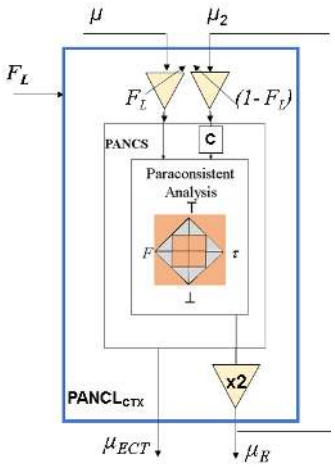

Fig. 3. $PANCL_{CTX}$ using a PAN in its core.

$$\mu_E[n] = (1 - F_L) * \mu_E[n-1] + F_L * \mu[n] \quad (1)$$

The use of PAL2v Filter prevents noise or inaccurate sensor readings from compromising the overall system analysis, allowing actionable conclusions to be drawn, even in scenarios where inaccurate, incomplete, or seemingly incompatible information coexists [7]. This feature, together with the low computational cost and simplicity of the PANnet implementation, makes PAL2v highly suitable for applications in intelligent systems, process control, and monitoring of critical variables [7].

3. METHODOLOGY

We designed an experimental platform, consisting of MQ135 sensors (for CO, NH, and VOCs detection), MQ7 (for CO detection), and MQ2 (for smoke detection), all connected to an ESP32 microcontroller. Figure 4 presents the electrical connections.

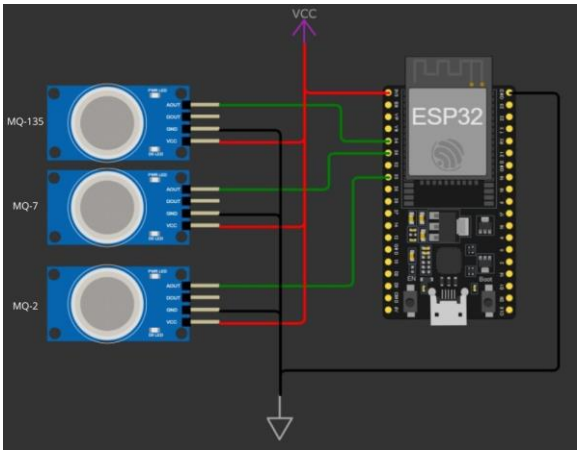

Fig. 4. Electrical connection of the Air Quality Estimator.

The analog signals from the MQ sensors are digitized by the ESP32 ADC and processed by a PAL2v algorithm. Each signal from sensors is first filtered using individual PAL2v filters. The filter's objective is to attenuate high-frequency noise and unwanted fluctuations typical of low-cost sensors, without compromising the fidelity of the raw data. The value of F_L for all signals is 0.1.

After normalization and filtering, the sensor signals pass through a paraconsistent analysis network (PANnet), which is composed of two PANs. The PAN performs PAL2v calculations between input variables (μ, λ), presenting in its output the resulting degree of evidence (μ_{ER}), between [0,1].

The first output generates a value between [0,1] from the analysis of the inverse of the CO and Smoke measurements. The output of this NAP and the NO signal are analyzed by the second NAP, which outputs an air quality estimate. Figure 5 illustrates the flowchart of how the microcontroller executes the proposed PAL2v Air Quality Estimator.

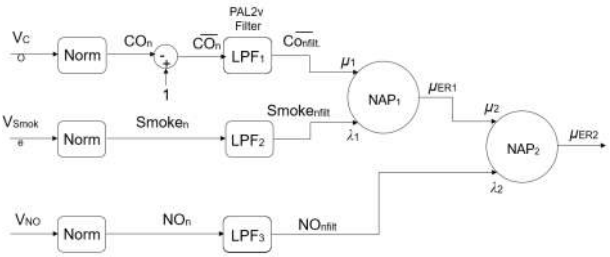

Fig. 5. Diagram of PAL2v Air Quality Estimator.

After preprocessing, the data were analyzed using PANnet for paraconsistent inference. The PANnet output (μ_{ER2}) with output between [0,1] or 0-100%, allowed for the classification of air quality into qualitative categories on an IoT platform: excellent/good (green), regular (yellow), and critical (red). Adaptive filtering techniques and paraconsistent logic were employed—empirical specificity from literature-based reference standards compensated for the limitations of multipurpose (cross-sensitivity) and low-cost sensors. After the PAL2v processing, the microcontroller sends the values via Wifi to a remote viewing panel designed using the Blink platform.

Copyright © 2025 ISESC

4. RESULTS

The sensor data and the final value of the Air Quality Estimator are transmitted via the IoT to the Blynk platform, where they are displayed as measured air quality indicators. Figure 6 shows the interface developed on the platform. In these graphs, the figure shows the three measurement values, as CO in blue ("Monóxido de Carbono" in Portuguese), Smoke in yellow ("Fumaça" in Portuguese), and NH in green (Óxido Nitroso" in Portuguese), ranging from 0 to 1.

The bar graph at the top displays the final air quality response ("Qualidade do Ar" in Portuguese), which is a summary indicator of air cleanliness calculated by PAL2v, also varying on the same scale.

The known limitations of MQ sensors, such as cross-sensitivity (the tendency for a sensor to respond to gases other than its intended target) and environmental influences, were partly alleviated by employing the PAL2V filter. This approach addresses the concerns outlined in [4] and emphasizes the importance of digital compensation in real-world settings.

The findings demonstrated that the MQ sensors could reliably measure the concentrations of the monitored gases. The application of the PAL2v filter, combined with paraconsistent logic, enabled the practical interpretation of the data. This process generated a satisfactory qualitative air quality index in accordance with recognized environmental parameters.



Fig. 6. IoT interface of the PAL2v Air Quality Estimator.

5. CONCLUSION

The system successfully integrated the MQ series sensors with the ESP32 platform for continuous residential air quality monitoring. The prototype allowed an uninvial installation and the collection and analysis of reliable wireless data using PAL2V for filtering and inference.

The PAL2V filter reduced noise and stabilized readings, thus improving the quality of gas concentration measurements. This approach has produced a qualitative index consistent with environmental standards and sensor performance. A limitation remains with MQ sensors, which display cross-sensitivity and are susceptible to environmental factors. The use of the PAL2V filter and empirical calibration has reduced some problems, but further compensation or additional sensors for more robust data are required.

Future work should extend the system to more sensitive environments, such as day care centers and hospitals, where air quality is critical. Exploring other sensors and improving the IoT interface can be achieved through the use of the MQTT protocol, which can expand and enhance system operation.

REFERENCES

[1] VERMA, Anurag et al. Sensing, controlling, and IoT infrastructure in smart building: A review. IEEE Sensors Journal, v. 19, n. 20, p. 9036-9046, 2019. DOI: https://doi.org/10.1109/JSEN.2019.2922409.

[2] MANE, Supriya A. et al. Design, development, and validation of a portable gas sensor module: A facile approach for monitoring greenhouse gases. Coatings, v. 10, n. 12, p. 1148, 2020. DOI: https://doi.org/10.3390/coatings10121148.

[3] CHOJER, H. et al. Development of low-cost indoor air quality monitoring devices: Recent advancements. Science of the Total Environment, v. 727, p. 138385, 2020. DOI: https://doi.org/10.1016/j.scitotenv.2020.138385.

[4] WANG, Jianchen et al. Evaluation of suitability of low-cost gas sensors for monitoring indoor and outdoor urban areas. IEEE Sensors Journal, v. 23, n. 18, p. 20968-20975, 2023. DOI: https://doi.org/10.1109/JSEN.2023.3301651.

Copyright © 2025 ISESC

[5] CINCINELLI, Alessandra; MARTELLINI, Tania. Indoor air quality and health. International journal of environmental research and public health, v. 14, n. 11, p. 1286, 2017. DOI: https://doi.org/10.3390/ijerph14111286.

[6] MOUHIM, SANAA; LACHHAB, FADWA. Towards a context awareness system using IoT, AI, and big data technologies. IEEE Access, 2025. DOI: https://doi.org/10.1109/ACCESS.2025.3546865.

[7] CARVALHO JUNIOR, Arnaldo de; et al. A comprehensive review on paraconsistent annotated evidential logic: algorithms, applications and perspectives. Engineering Applications of Artificial Intelligence, v. 127, part B, p. 1-11, 2024. DOI: https://doi.org/10.1016/j.engappai.2023.107342.

[8] FAKHABI, Mona Masroor; HAMIDIAN, Seyed Mohammad; ALIEHYAEI, Mehdi. Exploring the role of the Internet of Things in green buildings. Energy Science & Engineering, v. 12, n. 9, p. 3779-3822, 2024. DOI: https://doi.org/10.1002/ese3.1840.

[9] DA SILVA FILHO, J I. Treatment of uncertainties with algorithms of the paraconsistent annotated logic. Journal of Intelligent Learning Systems and Applications, v. 4, n. 2, p. 144-153, 2012. DOI: https://doi.org/10.4236/jilsa.2012.42014.

[10] DE CARVALHO, Arnaldo et al. Rotary inverted pendulum identification for control by paraconsistent neural network. IEEE Access, v. 9, p. 74155-74167, 2021. DOI: https://doi.org/10.1109/ACCESS.2021.3080176.

[11] DE CARVALHO JR, Arnaldo et al. A Paraconsistent Artificial Neural Cell of Learning by Contradiction Extraction (PANCLCTX) with Application Examples. Springer Nature Switzerland, 2023. p. 63-79. DOI: https://doi.org/10.1007/978-3-031-35759-6_5.

[12] CARVALHO, Arnaldo et al. Paraconsistent state estimator for a furuta pendulum control. SN Computer Science, v. 4, n. 1, p. 29, 2022. DOI: https://doi.org/10.1007/s42979-022-01427-z.

Copyright © 2025 ISESC